Gilbert Davey's pre-war writing - Download 7:

EXPERIMENTAL CIRCUITS

First published in *Practical Wireless,* June 1941.
Published under Davey's initials only, but authorship confirmed on his own list.

Safety: It is your own responsibility to ensure that you work safely and that equipment (especially mains-operated power supplies) is soundly built and adequately housed. If you are in any doubt about your understanding of the information given or referred to in this download, or about your ability to work safely, you should seek the help of a qualified person.

For convenience, this single wartime article found so far is included with other genuinely pre-war articles.

Some years previously, Davey had written a similar article, **Famous Circuits of the Past**, published in *Popular Wireless* on 28 July 1934. These two articles reflect a recurring theme in his pre-war writing: his interest in re-visiting older receiver designs generally regarded as obsolete. This is hardly surprising; Davey had started upon his hobby in 1927 when given some old magazines by the friend who built a wireless set for the family. One wonders if Davey had kept these, and mined them for both the 1934 article and this one published in 1941.

Even if readers' wartime circumstances precluded construction and experiment, these circuit ideas could have been a source of much pleasure and back-of-envlope musing during spare moments in fox-hole, barracks, or air-raid shelter.

The Reinartz circuit
Davey mentions this circuit, but it is not illustrated, and his comment about it has perhaps suffered from editing. He might be construed here as saying that the Reinartz generally featured swinging coil (variometer) coupling, but I think he is distinguishing between the Reinartz circuit and swinging-coil reaction control, widely used in the 1920s. In his earlier *Popular Wireless* article mentioned above, he says that in the mid-1920s the Reinartz circuit was regarded as "quite freakish and suitable only for CW [Morse] reception". I have shown two variations on the Reinartz circuit overleaf. In each of these, a variable capacitor feeds a controllable amount of RF from the anode to a continuation of the tuning coil at its earth end.

Reflex circuit (Fig.1 and Fig. 2)
Both versions that Davey gives appear to employ a reaction coil and capacitor alongside the reflex arrangement. Other versions I have seen use the reflex arrangement alone.

The DeForest Ultra Audion (Fig. 3)
With leaky-grid detection, the grid signal is taken from the junction of the series-commected tuning coil and capacitor.

The (Gernsback) Monodyne (Fig. 4)
This shows HT+ve connected to earth, and the phones placed between HT-ve and LT-ve! In the earlier *Popular Wireless* article, Davey attributes this to Gernsback; I believe this is Hugo Gernsback, electronics engineer and "Father of Science Fiction" after whom the "Hugo" science-fiction awards are named.

The "Chitos" circuit (Fig. 5)
This shows another circuit that Davey assures us worked well. In his earlier *Popular Wireless* article, he labels it "A Famous Error", and relates that it became very popular after its appearance in 1925 in that magazine. It was in fact designed and submitted by a Mr Childs, but was christened the "Chitos" because the publishers misread his signature!

Armstrong and Flewellyn circuits (Fig. 6 and Fig. 7)
Other variations of these famous circuits are sometimes seen.

Semi-reflex circuit (Fig. 8)
In the *Popular Wireless* article, Davey shows an almost identical circuit which he refers to as the Trinadyne. The only difference is that it lacks the connection from grid coil centre-tap to earth as shown here.

Anode-input circuit (Fig. 9)
As with the Gernsback Monodyne, this shows HT+ve grounded, so the whole circuit is negative with respect to earth.

Filament-input: the Filadyne circuit (Fig. 10)
With HT+ve connected to grid via the phones, and the anode led to a potentiometer across the LT supply, this appears quite outlandish! In the *Popular Wireless* article, this is referred to as the Filadyne, and is captioned "A topsy-turvey valve arrangement of remarkable powers".

Experimental Circuits

This Brief Review of Some Old Favourites Should Prove Particularly Interesting to Beginners

RECENTLY I happened to meet a young friend who has always been a keen radio enthusiast, and who had managed to get together the necessary components for his first transmitter just before the outbreak of war. On the commencement of hostilities he had to give up all ideas of transmitting and was complaining to me rather sadly of the lack of interest in radio to-day, and of the fact that he had nothing with which to experiment. As a result I promised to look out a few ideas for him, and in the course of so doing, unearthed a number of radio journals and handbooks which were published around 1925 and upwards, and supplied him with a batch of circuits which were in use then, and which he had never seen before. I suggested he should try these out with modern components or modernise the circuits, and also try them on short-waves. In giving the details of these old circuits here, I feel sure some of the "old hands" will revive pleasant memories in seeing them again, and that a great many of the younger generation have never seen them before. They all worked well with the dull-emitter valves and components of their day—how they may work to-day is, I suggest, a matter for a number of interesting experiments.

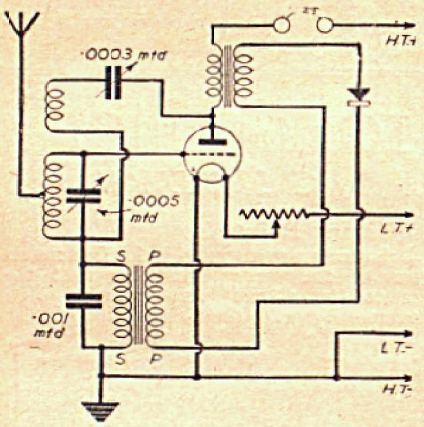

Fig. 1.—A typical single-valve reflex circuit.

Reflex Circuit

In those days the Reinartz, on which is based the detector circuit of to-day, was just one of a number of circuits, the general method then of obtaining reaction being by the "swinging coil" means of coupling the grid tuning coil and the reaction coil. A popular circuit of the day was the "Reflex" because it gave results with one valve, equivalent almost, to a two-valver. Fig. 1 shows the most modern reflex circuit I could find. The H.F. transformer in the anode circuit was an untuned transformer which was then in favour. I suggest that this circuit could be modernised by using choke H.F. coupling with ganged coils and condensers, and either crystal or valve detection.

The valve, as you will see, acts both as H.F. and L.F. amplifier, and you could try a screen-grid valve here, but in such a case it would be desirable to feed its output into an L.F. stage by means of resistance-capacity coupling. A suggested circuit is shown in Fig. 2; I have not tried it, but it is put forward as an idea for experiment.

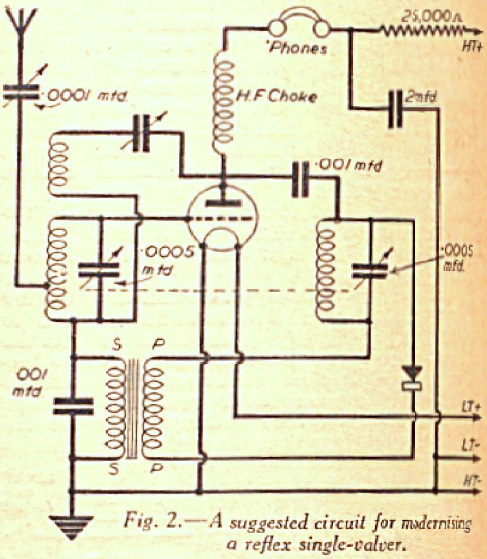

Fig. 2.—A suggested circuit for modernising a reflex single-valver.

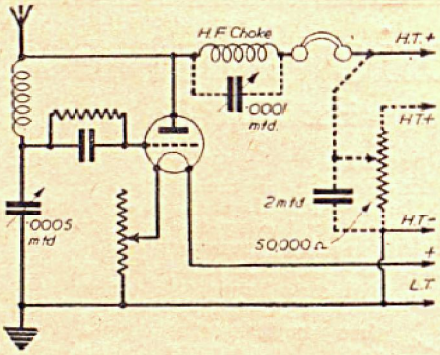

Fig. 3.—The de Forest "Ultra Audion" circuit.

"Ultra Audion" Circuit

A popular circuit of some 16 years ago was the de Forest "Ultra Audion" shown in Fig. 3. The great difficulty with this circuit was reaction control, and anything was used to control this from a variable grid-leak to a finely controllable rheostat. Two suggested methods are shown in dotted lines on the diagram—one is a control of H.T. voltage, the other is a condenser across the H.F. choke. The former idea is likely to be most successful, although I always controlled reaction, when using this circuit, by means of the filament rheostat. Two more circuits of the time are shown in Figs. 4 and 5. The first, the "monodyne," was an American circuit, and was considered very useful at the time; the other was one of the "special" receivers which used to appear in those days, and I know it worked well. In its original form, everything possible, such as grid leak and grid condenser, was variable, but this should not be necessary to-day.

Armstrong and Flewellyn Circuits

Figs. 6 and 7 are included as a matter of interest, and show two of the super-regenerative receivers of many years ago—the Armstrong and Flewellyn, respectively. Like the reflex, the idea of such circuits

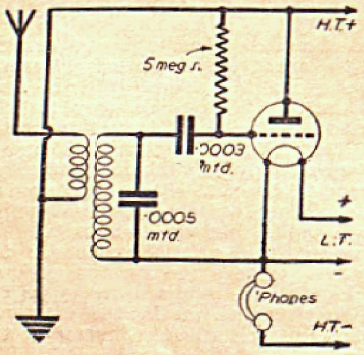

Fig. 4.—An American circuit known as the "Monodyne."

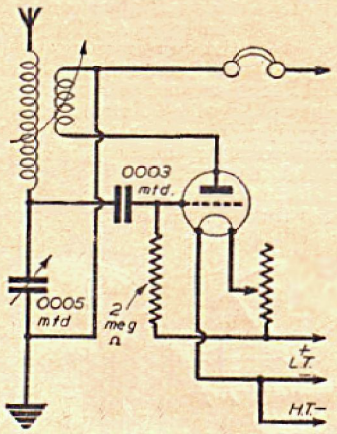

Fig. 5.—Another popular circuit for a single-valver.

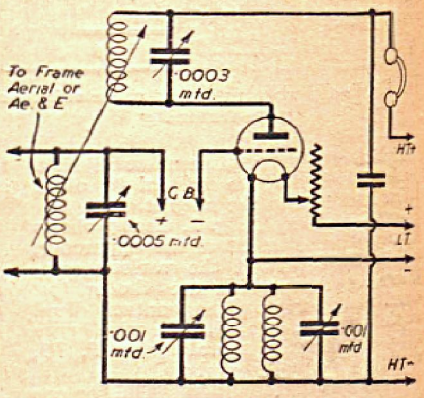

Fig. 6.—The Armstrong circuit.

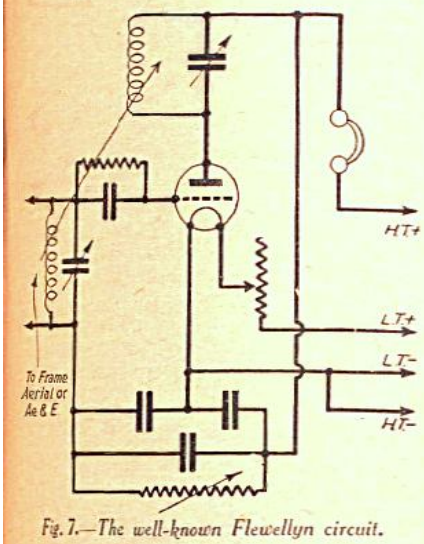

Fig. 7.—The well-known Flewellyn circuit.

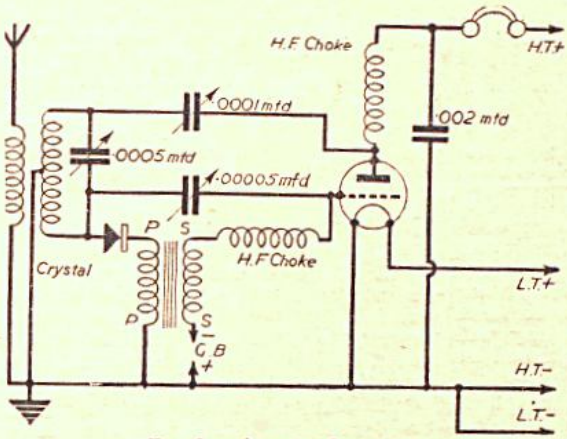

Fig. 8.—A semi-reflex circuit.

It is hoped that these diagrams will bring back pleasant memories to some older hands, and also provide many interesting sources of experiment for the younger readers. All circuits are shown in one-valve form—any L.F. amplification desired can simply be added by connecting the L.F. transformer primary in place of the 'phones shown. The coils originally used, of course, were the plug-in two-pin type, but any suitable form of coil could be used, or special coils wound for the purpose.—G. W. D.

was to get the "last ounce" out of each valve.

Finally, here are three more out-of-the-ordinary circuits I can recall—these are more recent, being only about 10 years old. Fig. 8 shows a semi-reflex circuit, actually consisting of a crystal detector, and a stage of L.F. amplification into which a certain amount of H.F.—controlled by the .00005 condenser—is deliberately fed in order to allow reaction to be provided. The circuits given in Figs. 9 and 10 are direct contrasts—Fig. 9 gives an anode-input circuit, whilst Fig. 10 is a filament input circuit, and both were reputed to give excellent results.

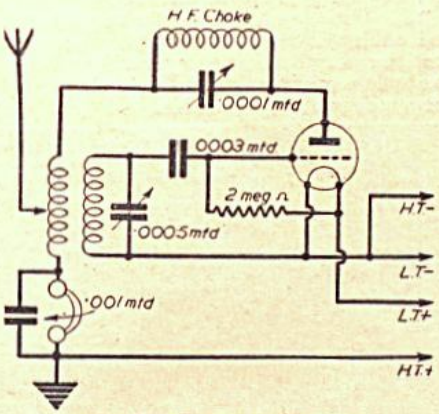

Fig. 9.—An anode input circuit.

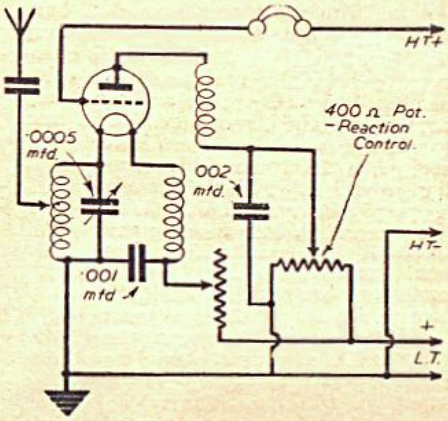

Fig. 10.—A filament input circuit.

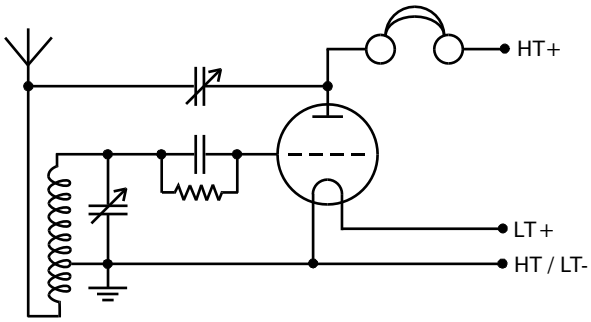

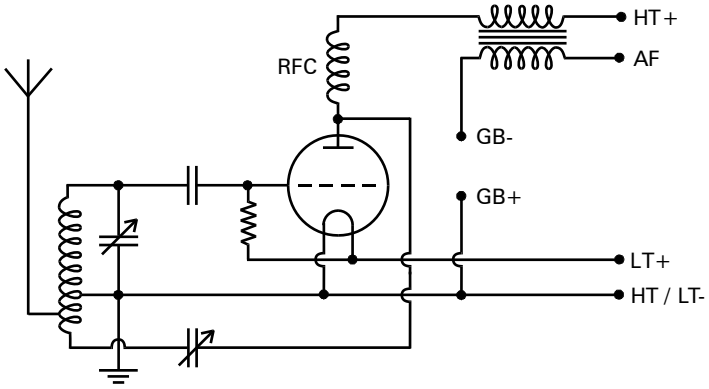

Two variation on the Reinartz circuit, mentioned but not illustrated in the article.